1853120
Carlisle Entertainment Center

Parts and Hardware List

A.	Top Assembly	1 pc
B.	Center Support Panel	1 pc
C.	Side Assemblies	2 pcs
D.	Open Compartment Panel	1 pc
E.	Stretcher	1 pc
F.	Bottom Assembly	1 pc
G.	Back Panels	2 pcs
H.	Doors	2 pcs
I.	Adjustable Shelf	1 pc
J.	Long Allen Head Bolts	4 pcs
K.	Short Allen Head Bolts	6 pcs
L.	Flat Washers	10 pcs
M.	Lock Washers	10 pcs
N.	Confirmat Screws	6 pcs
O.	Short Pan Head Wood Screws	12 pcs
P.	Long Pan Head Wood Screws	3 pcs
Q.	Phillips Head Wood Screws	8 pcs
R.	Metal Shelf Support Pins	4 pcs
S.	Allen Head Wrench	1 pc
T.	Phillips Head Screwdriver	1 pc

* Please make sure that you have all the parts indicated before you begin assembly of this item.
* This item should be assembled on a soft surface to prevent scratching the finish during assembly.
* This item may require periodic tightening.

1853120
Carlisle Entertainment Center
Hardware Illustrations

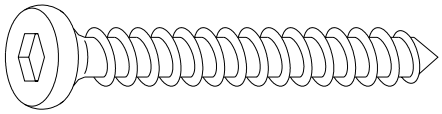

N. Confirmat Screw

R. Metal Shelf Support Pin

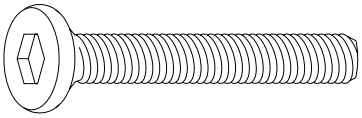

J. Long Allen Head Bolt

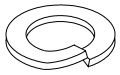

M. Lock Washer

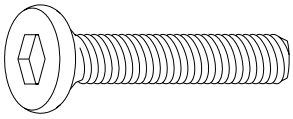

K. Short Allen Head Bolt

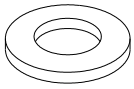

L. Flat Washer

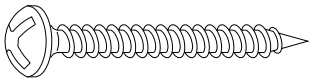

P. Long Pan Head Wood Screw

Q. Phillips Head Wood Screw

O. Short Pan Head Wood Screw

1853120
Carlisle Entertainment Center

Attach Side Assemblies to Bottom Assembly

Parts required

C.	Side Assemblies	2 pcs	L.	Flat Washers	6 pcs
D.	Open Compartment Panel	1 pc	M.	Lock Washers	6 pcs
E.	Stretcher	1 pc	N.	Confirmat Screws	6 pcs
F.	Bottom Assembly	1 pc	S.	Allen Head Wrench	1 pc
K.	Short Allen Head Bolts	6 pcs			

1. **Lay the Side Assemblies** on a soft, clean surface to prevent scratching. See illustration #1.
2. **Align Open Compartment Panel (D)** to the Side Assemblies (C). Make sure the profile section is facing outside. Align the exposed dowels on the Open Compartment Panel (D) to the pre-drilled holes on the Side Assemblies (C).
3. **Attach Stretcher (E)** Insert the exposed wood dowels on the end of stretcher (E) into the pre-drilled holes of the Side Assemblies (C).
4. **Attach Side Assemblies (C)** to the Open Compartment Panel (D) with Short Allen Head Bolts (K), Flat Washers (L) & Lock Washers (M) tighten using the Allen Head Wrench (S) as shown in illustration #1.
5. **Attach Bottom Assembly (F)** Align and insert the exposed dowels on the Side Assemblies (C) into the pre drilled holes on Bottom Assembly (F). Secure by inserting Confirmat Screws (N) into the pre-drilled holes on Side Assemblies (C) and tighten using Allen Head Wrench (S).

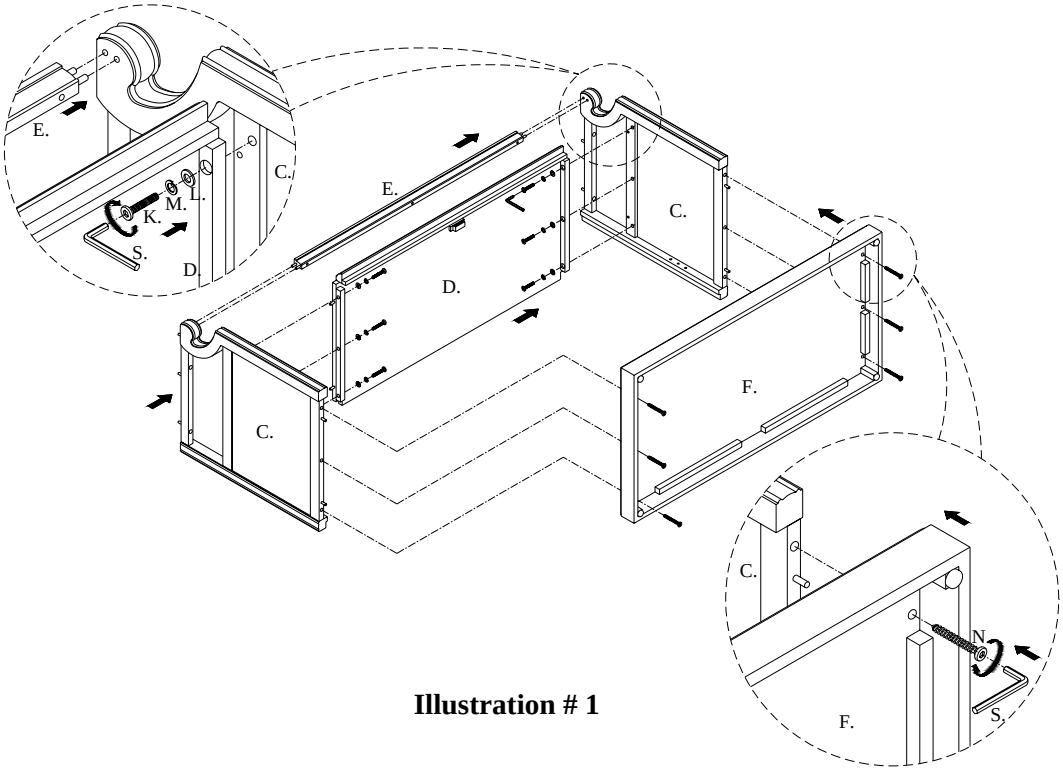

Illustration # 1

1853120
Carlisle Entertainment Center

Attach Top Assembly

Parts required

A.	Top Assembly	1 pc	L.	Flat Washers	4 pcs
B.	Center Support Panel	1 pc	M.	Lock Washers	4 pcs
E.	Stretcher	1 pc	P.	Long Pan Head Wood Screws	3 pcs
J.	Long Allen Head Bolts	4 pcs	T.	Phillips Head Screwdriver	1 pc

6. Turn assembled portion upright as shown in illustration #2.
7. **Insert Center Support Panel (B)** Align the exposed dowels on Center Support Panel (B) to the pre-drilled holes on Open Compartment Panel (D). See illustration #2
8. **Attach Top Assembly (A)** Align the exposed dowels on top of Side Assemblies (C) and Center Support Panel (B) to the pre-drilled holes on the Top Assembly (A). Secure tightly with Long Allen Head Bolts (J), Flat Washers (L) & Lock Washers (M) using Allen Head Wrench (S).
9. **Secure Stretcher (E)** Insert Long Pan Head Wood Screws (P) into the pre-drilled holes on the bottom of Stretcher (E) and secure with Phillips Head Screwdriver (T).

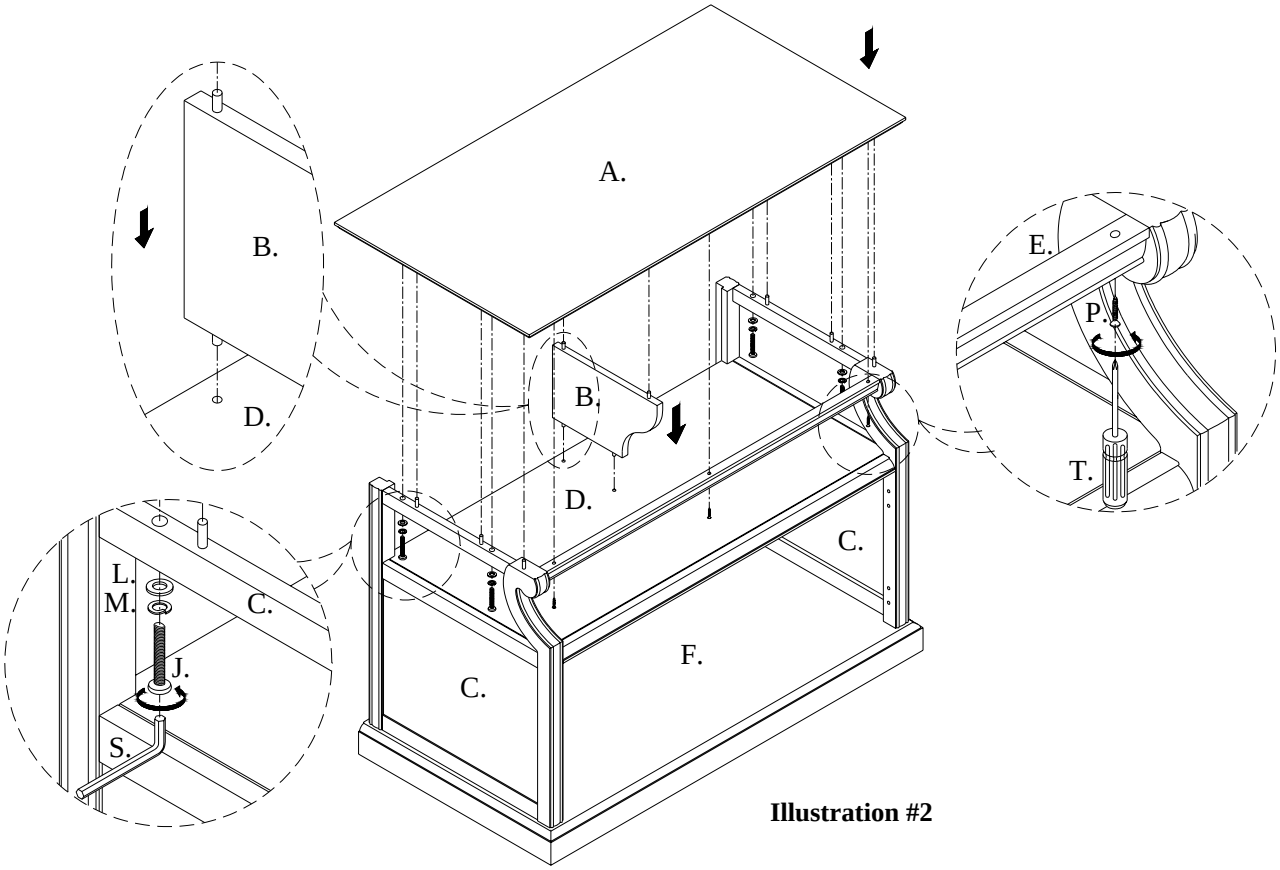

Illustration #2

1853120
Carlisle Entertainment Center

Attach Back Panels

Parts required

G.	Back Panels	2 pcs	T.	Phillips Head Screwdriver	1 pc
O.	Short Pan Head Wood Screws	12 pcs			

10. **Attach Back Panels (G)** Insert each Back Panel (G) into the grooved lines on the Side Assemblies (C). Make sure the pre-drilled screw holes are aligned. Insert Short Pan Head Wood Screw (O) and secure with Phillips Head Screwdriver (T). See illustration #3.

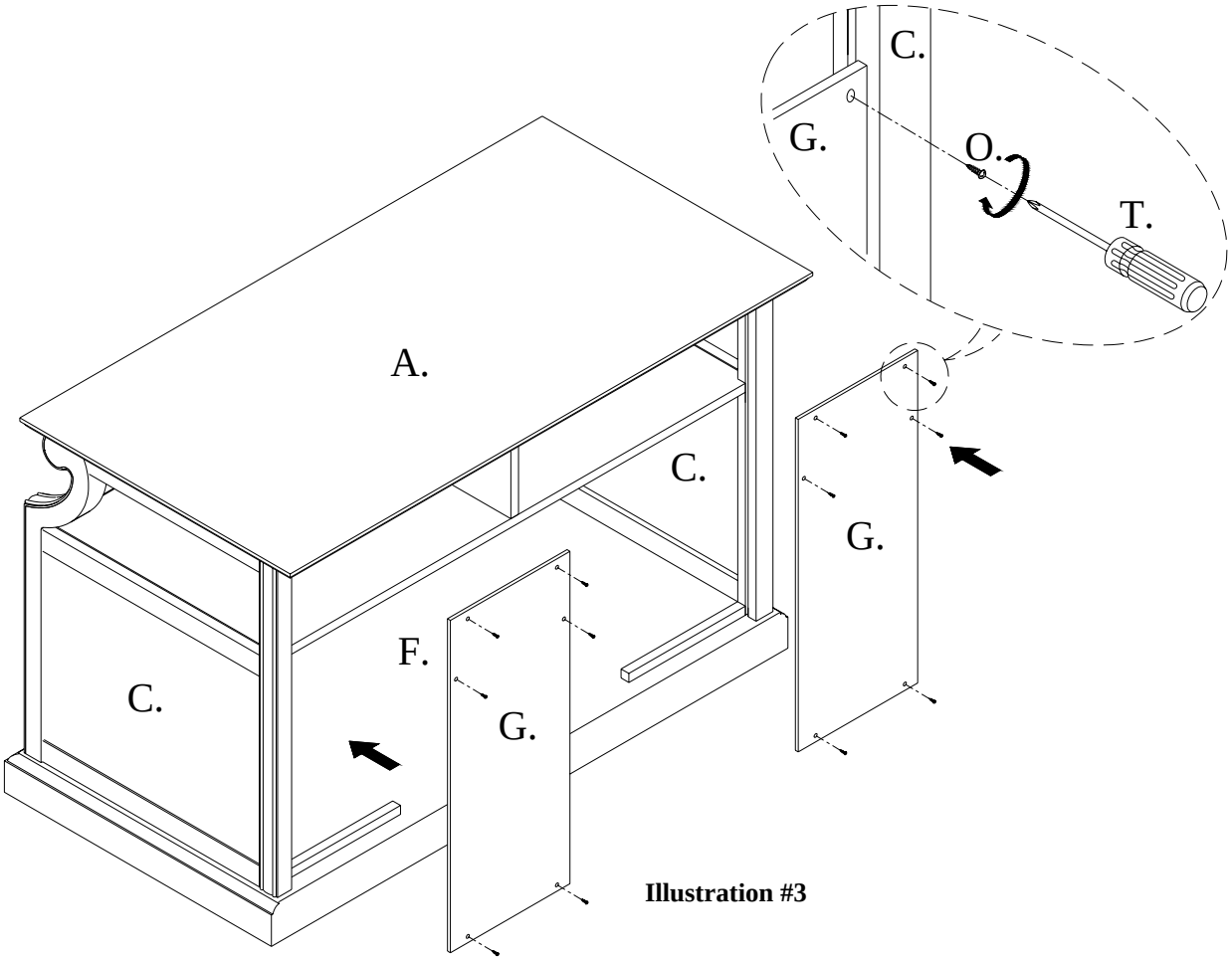

Illustration #3

1853120
Carlisle Entertainment Center

Attach the Doors

Parts Required

I.	Adjustable Shelf	1 pc	R.	Metal Shelf Support Pins	4 pcs
Q.	Phillips Head Wood Screws	8 pcs	T.	Phillips Head Screwdriver	1 pc

11. **Insert Adjustable Shelf (I)** Insert two Metal Shelf Support Pins (R) at the desired height of the pre-drilled holes on Side Assembly (C) one side at a time. Insert Adjustable Shelf (I) diagonally and lay on top of the Metal Shelf Support Pins (R). Insert the remaining two Metal Shelf Support Pins (R). See illustration #4.
12. **Assemble the Doors (H)** Align screw holes on hinges to the pre-drilled holes on Side Assemblies (C). Make sure metal plate on the back of door is aligned to the magnetic catch on Open Compartment Panel (D). Secure with Phillips Head Wood Screws (Q) using Phillips Head Screwdriver (T). See illustration #4.

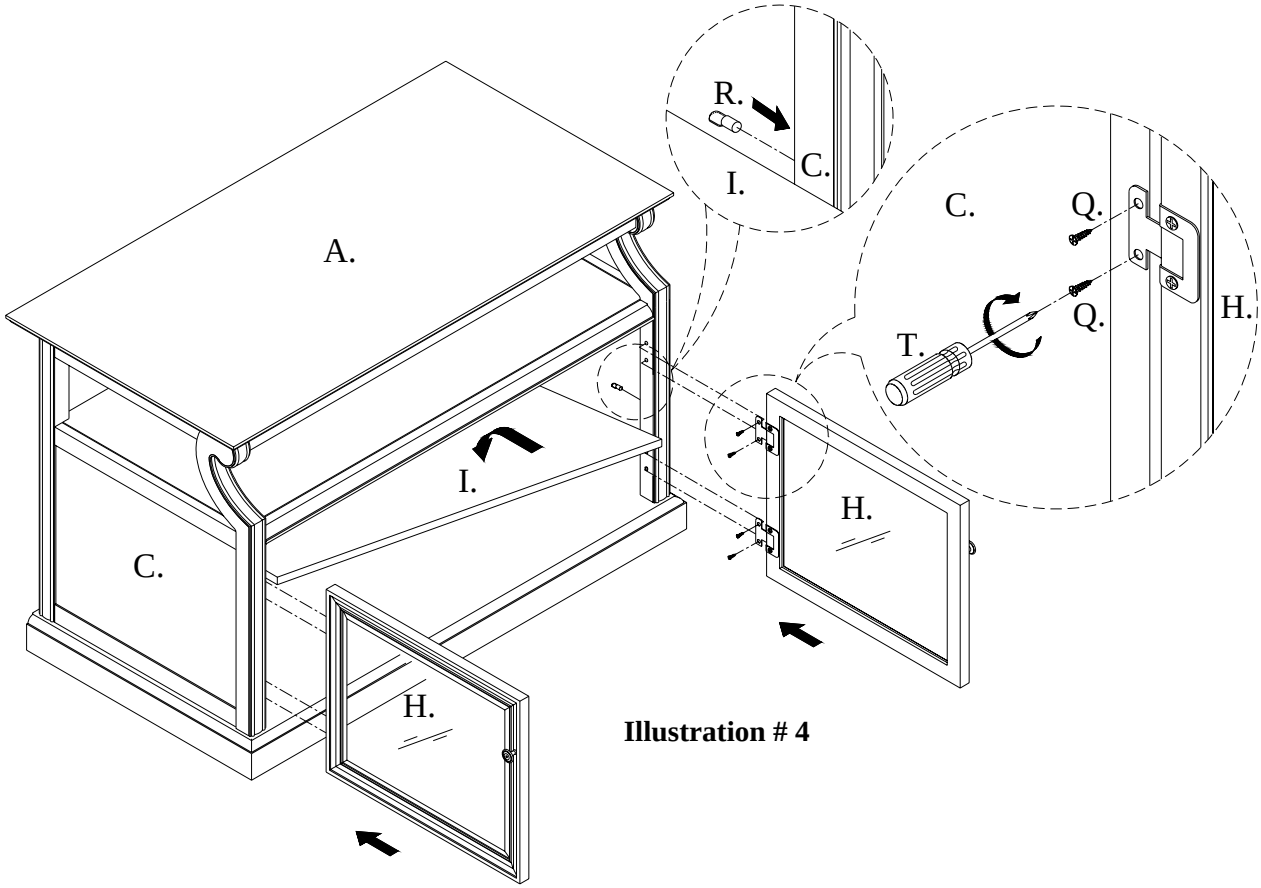

Illustration # 4